NEOMOUNTS MONITOR/LAPTOP DESK MOUNT

SPECIFICATIONS

GENERAL

Min. screen size*	10 inch
Max. screen size*	27 inch
Min. weight	0 kg (per screen)
Max. weight	10 kg (per screen)
Screens	1
VESA minimum	75x75 mm
VESA maximum	100x100 mm
Desk mount	Clamp

FUNCTIONALITY

Type	Tilt Rotate Swivel Full motion
Height adjustment	0-45 cm
Depth adjustment	10-43 cm
Tilt (degrees)	180°
Swivel (degrees)	180°
Rotate (degrees)	360°
Adjustment type	Manual

INFORMATION

Color	Black
Main material	Steel
Warranty	5 year
EAN code	8717371444891

*Please note: The inch sizes stated are just an indication, combined with the weight and VESA sizes. The maximum weight and VESA size are absolute restrictions for the products and should not be exceeded.

Neomounts Full Motion and Desk Mount (clamp) for 10-27" Monitor Screen AND Laptop, Height Adjustable - Black

The Neomounts desk mount, model FPMA-D960NOTEBOOK is a tilt-, swivel and rotatable desk mount for flat screens up to 27" notebooks up to 22". This mount is a great choice for space saving placement on desks using a desk clamp.

Neomounts versatile tilt (180°), rotate (360°) and swivel (180°) technology allows the mount to change to any viewing angle to fully benefit from the capabilities of the flat screen. The mount is manually height adjustable from 0 to 45 centimetres. Depth adjustable from 10 to 43 centimetres. An innovative cable management conceals and routes cables from mount to flat screen. Hide your cables to keep the workplace nice and tidy.

Neomounts FPMA-D960NOTEBOOK has three pivot points and is suitable for screens up to 27" (69 cm). The weight capacity of this product is 10 kg each screen and 15 kg each notebook. The desk mount is suitable for screens that meet VESA hole pattern 75x75 or 100x100mm. Different hole patterns can be covered using Neomounts VESA adapter plates.

By using an ergonomic mount neck- and back complaints can be avoided. Ideal for use in offices and on counters or in a reception area.

All installation material is included with the product.

NEOMOUNTS MONITOR/LAPTOP DESK MOUNT

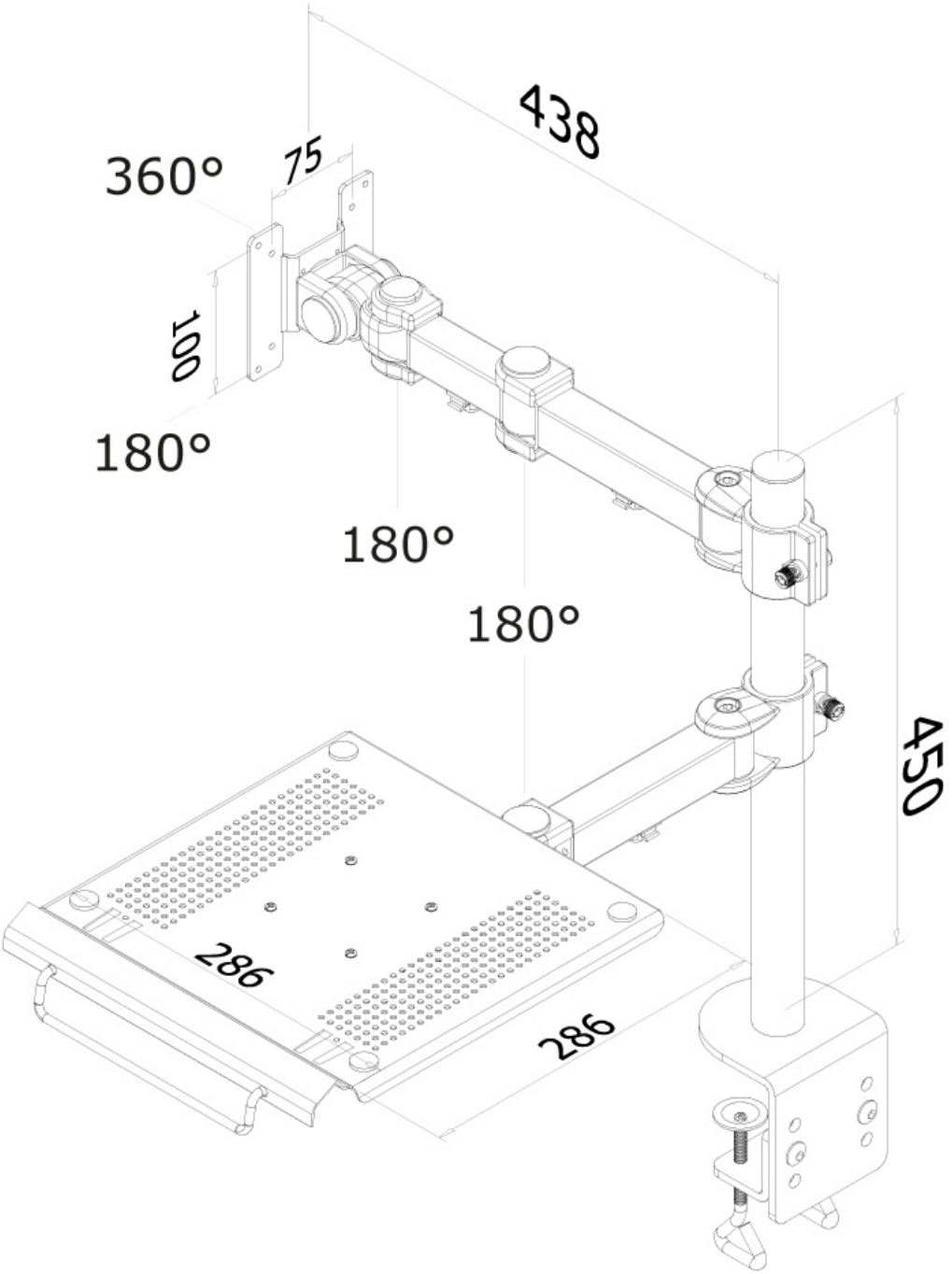

Neomounts

Measuring unit: mm