NSMONITOR20

SPECIFICATIONS

GENERAL

Min. screen size*	10 inch
Max. screen size*	32 inch
Min. weight	0 kg (per screen)
Max. weight	10 kg (per screen)
Screens	1
Desk mount	Stand

FUNCTIONALITY

Type	Fixed
Height adjustment	4,6-16,8 cm
Width adjustment	50 cm
Depth adjustment	33 cm
Adjustment type	Manual

INFORMATION

Color	Black
Main material	Plastic
Warranty	5 year
EAN code	8717371445713

*Please note: The inch sizes stated are just an indication, combined with the weight and VESA sizes. The maximum weight and VESA size are absolute restrictions for the products and should not be exceeded.

NEOMOUNTS MONITOR/LAPTOP RISER

Neomounts Laptop or Monitor Stand/Riser, Height Adjustable - Black

The Neomounts NSMONITOR20 is a desk riser for flat screens and laptops up to 10 kilo.

By using a riser for your monitor or laptop you can place the screen on the required height, avoiding neck- back and shoulder complaints. The height of the riser can be changed between 4,6 and 16,8 cm.

In the sleeves on the frontside and two backsides you can tuck away things like a tablet or pencils so your desk is clean.

Cables can be guided through the cable router on the backside of the NSMONITOR20.

Neomounts®

NSMONITOR20 **NEOMOUNTS MONITOR/LAPTOP RISER**

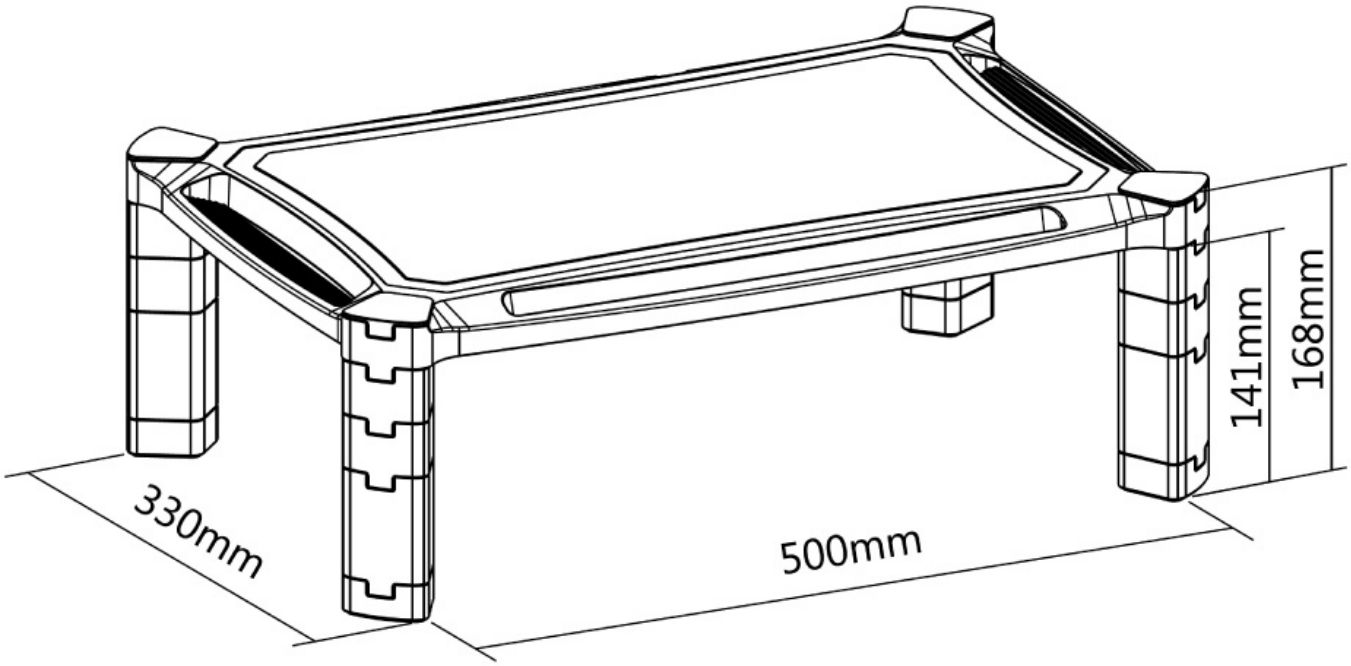

Neomounts

Neomounts B.V. | Wateringweg 62 | 2031 EJ Haarlem | The Netherlands | +31(0)23-5478888 | info@neomounts.com | www.neomounts.com
Chamber of Commerce 37076185 | VAT NL805154383B01 | BIC RABONL2U | IBAN NL51RABO0375403299